DC Axial Compact Fan
Technical Information

D04DZ SERIES

Description: **d.c. axial fan 40x40x20 mm**

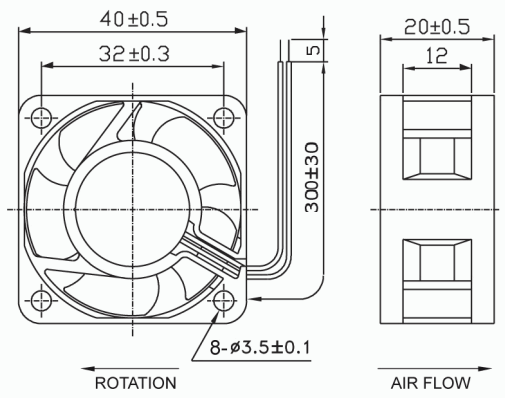

Casing material:	Black fibreglass reiforced plastic (PBT) UL 94V-0
Impeller material:	Black fibreglass reiforced plastic (PBT) UL 94V-0
Protection degree:	IP20, according to EN 60529 standard
Fixing system:	4 holes Ø3.5mm
Electrical connection:	2 leads 26AWG UL 1007, 300 mm long
Motor protection:	IC
Storage temperature:	from -40°C to +70°C
Rated temperature range:	from -10°C to +70°C
Lifetime L10 at 40°C:	70,000 h
Weight:	28 g
Approvals:	UL E223195

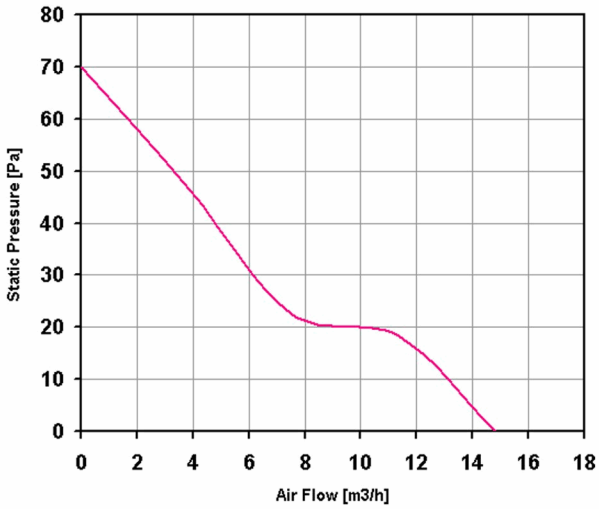

Model	Bearing	Voltage	Rated Current	Rated Power	Max Air Flow**	Static Pressure	Noise	RPM	Approvals
		(V)	(A)	(W)	(m3/h)	(Pa)	[db(A)]	(rpm)	
D04D05HWBZ00	Ball	24 V d.c.	0.09	2.16	15	70	36.0	7,800	CE; cURus

All specifications, data and drawing are subject to change without notice and are approximate. Please refer to our terms of sales including our warranty and limited liabilities clause