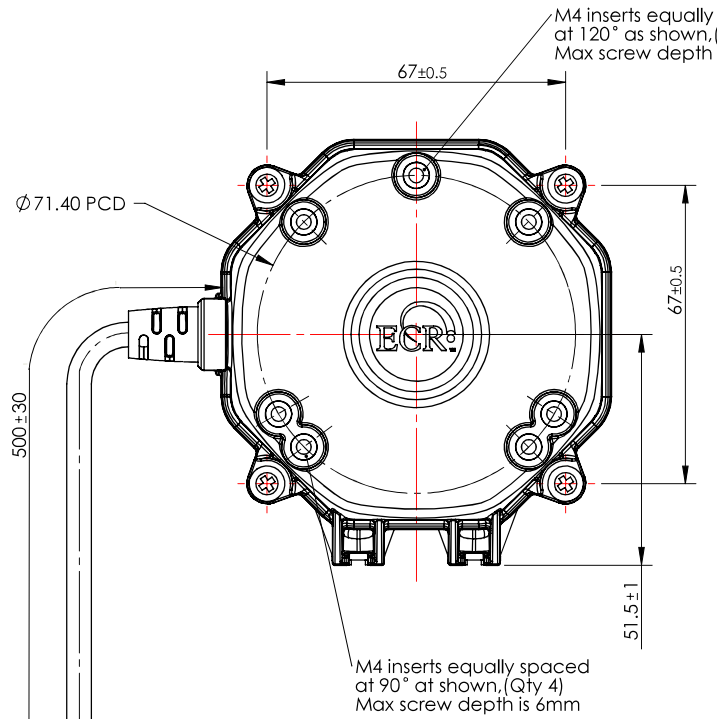

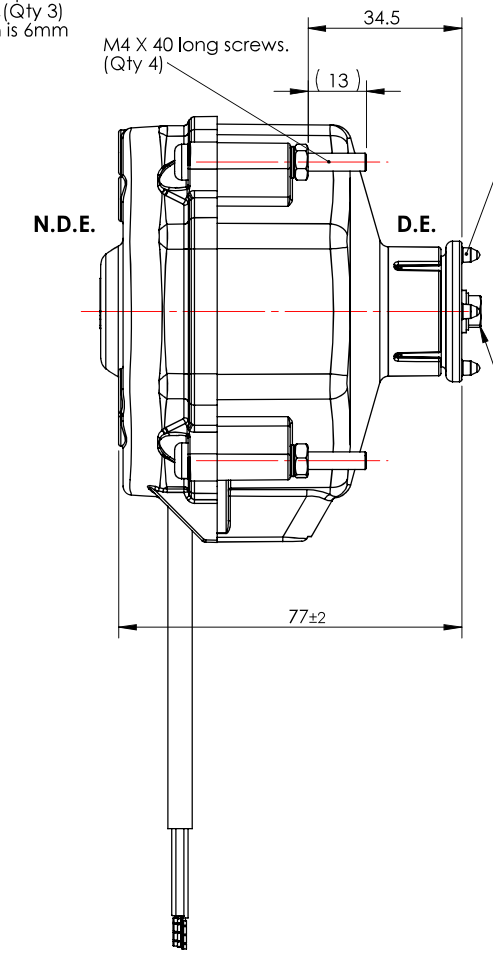

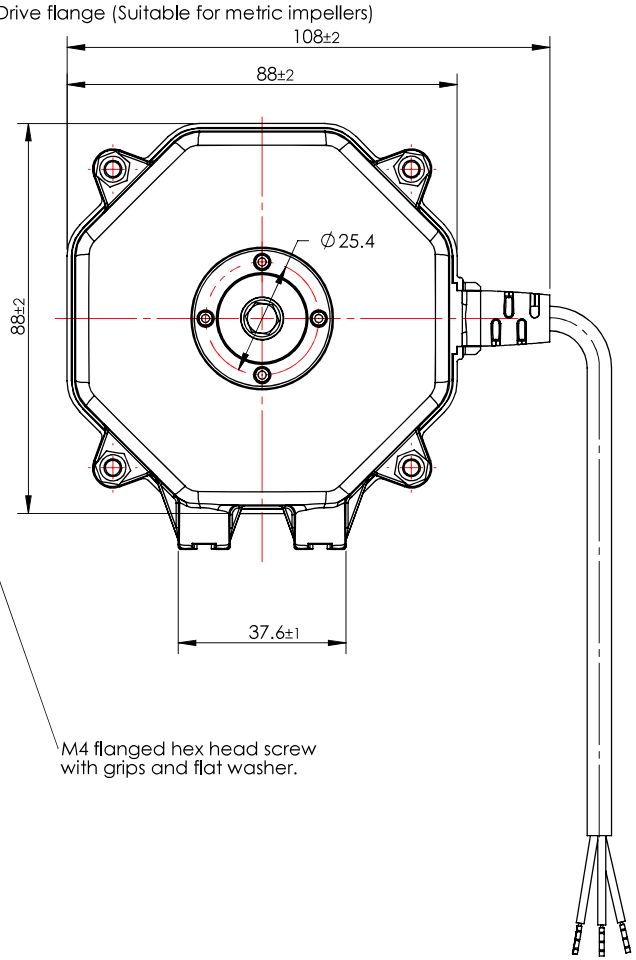

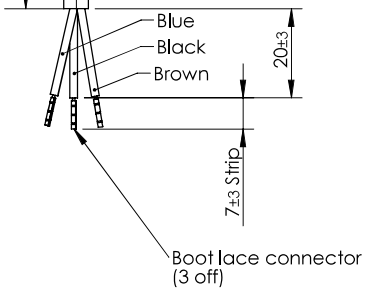

CONNECTION DIAGRAM

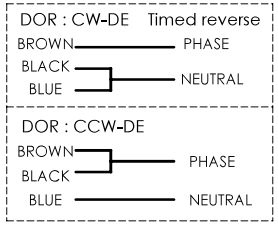

MOTOR RATING

PRODUCT CODE	Max output Watts, corresponding rpm	With speed control, DOR	Supply voltage, Frequency	Mode of operation
ECR01B0471	12 watts, 1300 rpm	1300 RPM, CCW-DE	230V, 50/60 Hz	Timed reverse - 1300 rpm, 3 minutes CW-DE

Note :
1. Motor Rating : Refer Table.
2. Compliance : CE, VDE.
3. Refer to operating instructions for Installation details.

ZONE	ISSUE	ECN	BRIEF NOTE	DATE	DRAWN	CHKD
N/A	1	N/A	INITIAL ISSUE	22/02/11	RDI	ASo

DO NOT SCALE OFF DRAWING

Wellington
www.wdtl.com

The information contained in this drawing is confidential. Reproduction of this document in any form is subject to explicit written permission.
© COPYRIGHT 2004 - 2009
Wellington Drive Technologies Ltd

Description: **DIMENSIONAL DRAWING**

Product Code: See table

Orthographic Projection — Third Angle

STATUS: P

Scale: 1:1.2 | Dimension Units: mm | Sheet size: A3

GENERAL TOLERANCE — LINEAR ±0.5 | ANGULAR ±0.3°

DWG No.: WD6277A

Sheet 1 of 1

Template no: WT3754A, A3 Drawing template for SW